Garmin International, Inc.
1200 E. 151st Street
Olathe, Kansas 66062 U.S.A.

FAA APPROVED

AIRPLANE FLIGHT MANUAL SUPPLEMENT
or
SUPPLEMENTAL AIRPLANE FLIGHT MANUAL

for the

Garmin GTX 33X and GTX 3X5 Transponders with ADS-B

as installed in

Diamond DA42

Make and Model Airplane

Registration Number: N238US Serial Number: 42.AC128

This document serves as an FAA Approved Airplane Flight Manual Supplement or Supplemental Airplane Flight Manual when the GTX 33X or GTX 3X5 with ADS-B is installed in accordance with Supplemental Type Certificate SA01714WI. This document must be incorporated into the FAA Approved Airplane Flight Manual or provided as an FAA Approved Supplemental Airplane Flight Manual.

The information contained herein supplements the FAA approved Airplane Flight Manual. For limitations, procedures, loading and performance information not contained in this document, refer to the FAA approved Airplane Flight Manual, markings, or placards.

FAA Approved By: Erik Frisk

Erik Frisk
ODA STC Unit Administrator
Garmin International, Inc.
ODA-240087-CE

Date: 21-DEC-2017

LOG OF REVISIONS				
	Page			
Revision Number	Date	Number	Description	FAA Approved
1	05/01/2013	All	Complete Supplement	*Robert Murray* Robert Murray ODA STC Unit Administrator Garmin International, Inc. ODA-240087-CE Date: *05/01/2013*
2	03/08/2016	All	New supplement format with GTX 3X5 added.	*Michael Warren* Michael Warren ODA STC Unit Administrator Garmin International, Inc. ODA-240087-CE Date: *03/08/2016*
3	12/07/2017	All	Updated SW versions and removed section 3.2.3. Updated section 2.2 Corrected PED FAR reference and additional minor corrections.	See cover page

Table of Contents

SECTION		PAGE
Section 1. GENERAL		**4**
1.1	GTX 33X	4
1.2	GTX 3X5	6
1.3	Capabilities	8
1.4	Installation Configuration	8
1.5	Definitions	11
Section 2. LIMITATIONS		**12**
2.1	Minimum Equipment	12
2.2	ADS-B Out	12
2.3	TIS Traffic Display with User Navigation Angle	12
2.4	Applicable System Software	13
2.5	Pressure Altitude Broadcast Inhibit (PABI)	13
2.6	Datalinked Weather Display (GTX 345 Only)	13
2.7	Portable Electronic Devices	13
Section 3. EMERGENCY PROCEDURES		**14**
3.1	Emergency Procedures	14
3.2	Abnormal Procedures	14
Section 4. NORMAL PROCEDURES		**15**
4.1	Unit Power On	15
4.2	Before Takeoff	16
Section 5. PERFORMANCE		**16**
Section 6. WEIGHT AND BALANCE		**16**
Section 7. SYSTEM DESCRIPTION		**17**
7.1	GTX TIS Behavior	17
7.2	GTX 345R and G950/1000 No Bearing Traffic Alerts	17

Section 1. GENERAL

1.1 GTX 33X

The Garmin GTX 33X family consists of the GTX 330 ES and GTX 33 ES (Non-Diversity Mode S Transponders) and the GTX 330D ES and GTX 33D ES (Diversity Mode S Transponders). The ES option of any of the transponders provides ADS-B extended squitter functionality.

All Garmin GTX 33X transponders are a radio transmitter/receiver that operates on radar frequencies, receiving ground radar or TCAS interrogations at 1030 MHz and transmitting a coded response of pulses to ground-based radar on a frequency of 1090 MHz. Each unit is equipped with IDENT capability to initiate the SPI (special position identification) pulse for 18 seconds and will reply to ATCRBS Mode A, Mode C and Mode S All-Call interrogation. Interfaces to the GTX 33X are shown in the following block diagrams.

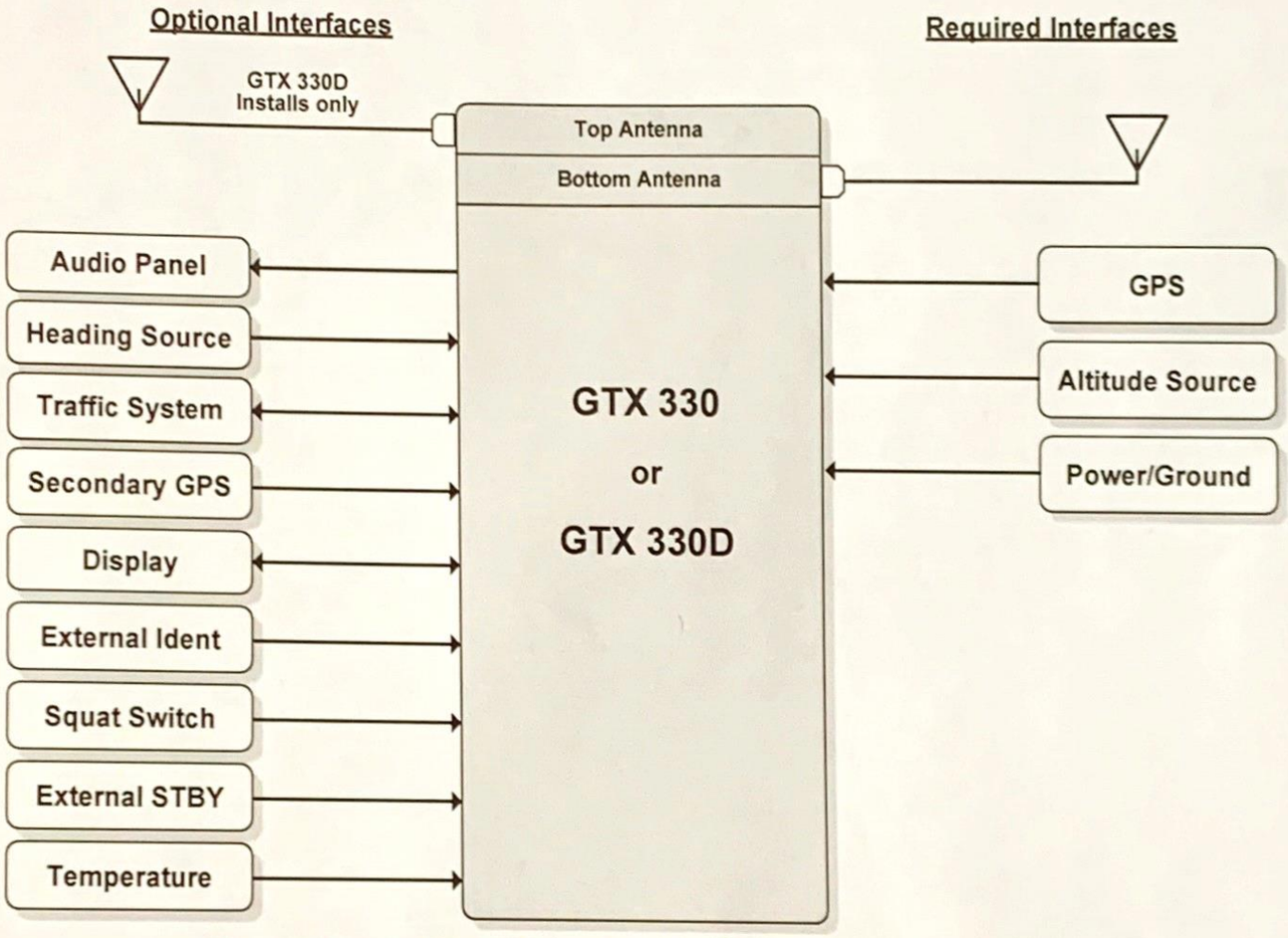

Figure 1 – GTX 330 or GTX 33D Interface Summary

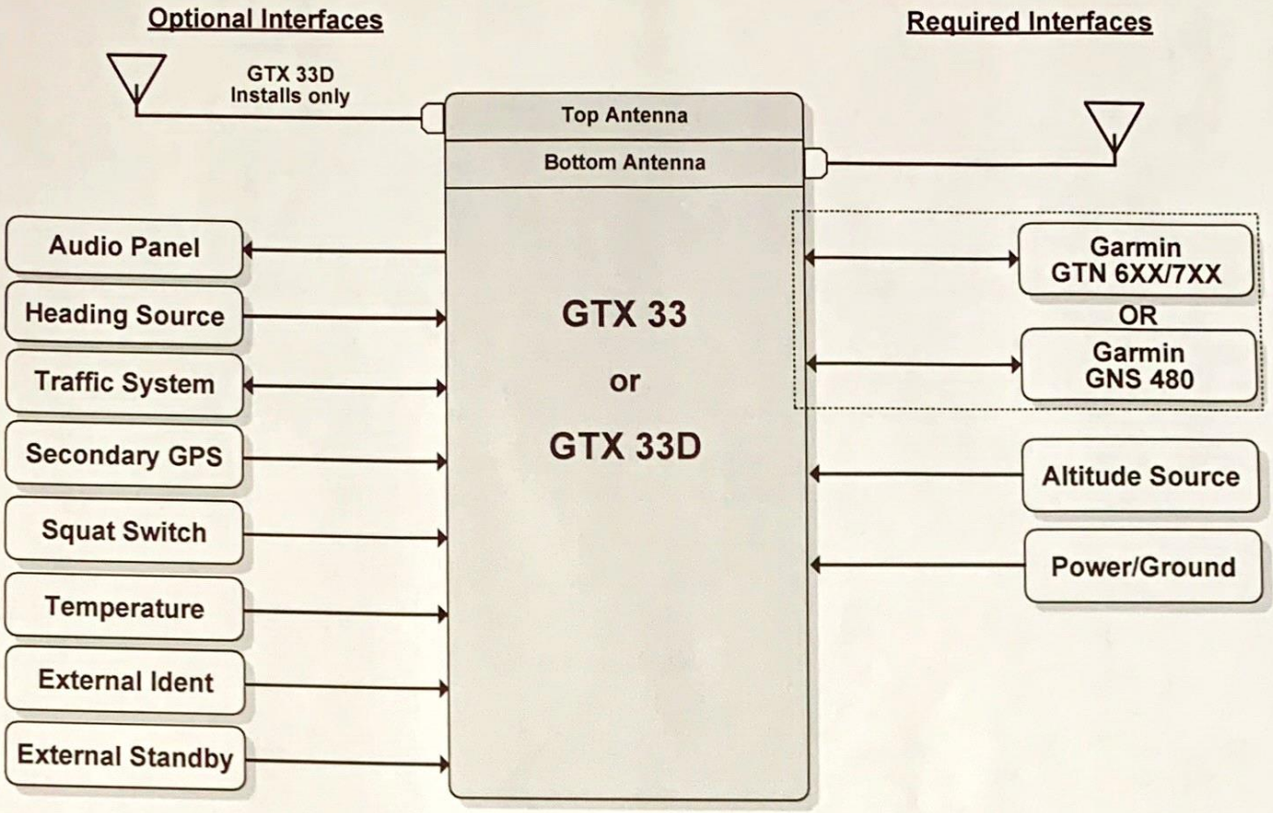

Figure 2 – GTX 33 or GTX 33D Interface Summary

The GTX 33X performs the following functions:

- Transmission of ADS-B out data on 1090 extended squitter (1090 MHz)
  - Integration of data from internal and external sources to transmit the following data per 14 CFR 91.227:
    - GPS Position, Altitude, and Position Integrity
    - Ground Track and/or Heading, Ground Speed, and Velocity Integrity
    - Air Ground Status
    - Flight ID, Call Sign, ICAO Registration Number
    - Capability and Status Information
    - Transponder Squawk Codes between 0000-7777.
    - Emergency Status
    - IDENT - initiates SPI (special position identification) pulse for 18 seconds
  - Pressure Altitude Broadcast Inhibit
- Reception of TIS-A traffic data from a ground station
- Provides TIS-A traffic alerting to the pilot via interfaced display and audio output

1.2 GTX 3X5

The Garmin GTX 3X5 family consists of the GTX 335, 335R, 345, and 345R transponders. The functional differences between each of these transponders are described in Table 1.

Function	GTX 335	GTX 335 w/GPS	GTX 335R	GTX 335R w/GPS	GTX 345	GTX 345 w/GPS	GTX 345R	GTX 345R w/GPS
Panel mount	x	x			x	x		
Remote mount			x	x			x	x
Mode S	x	x	x	x	x	x	x	x
ADS-B (out)	x	x	x	x	x	x	x	x
ADS-B Traffic					x	x	x	x
FIS-B					x	x	x	x
Internal GPS		x		x		x		x
Bluetooth					x	x	x	x
Optional Garmin Altitude Encoder	x	x	x	x	x	x	x	x

Table 1 – GTX 3X5 Unit Configurations

Interfaces to the GTX 3X5 are shown in Figure 3.

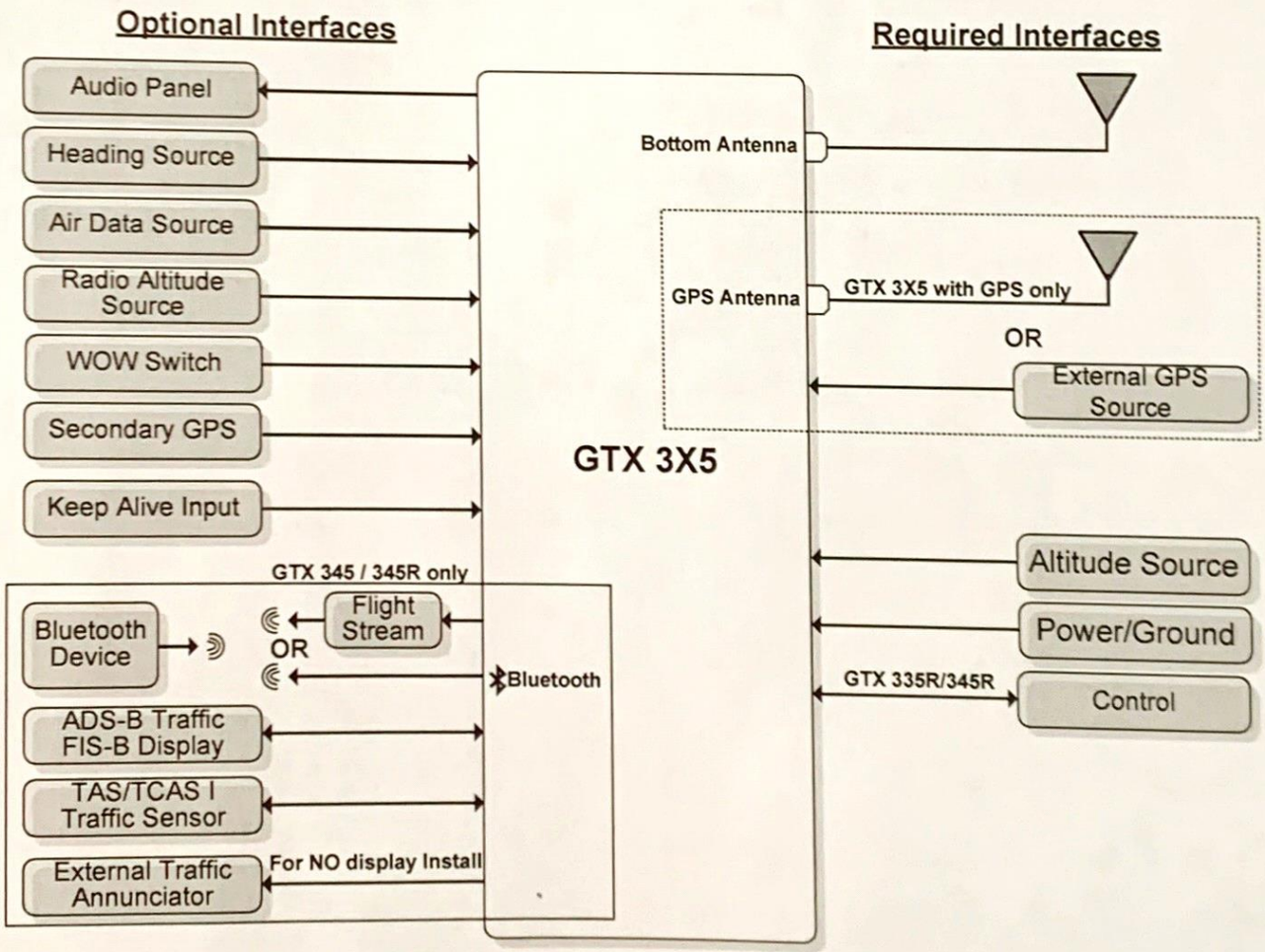

Figure 3 – GTX 3X5 Interface Summary

The GTX 3X5 performs the following functions:

- Transmission of ADS-B out data on 1090 extended squitter (1090 MHz)
  - Integration of data from internal and external sources to transmit the following data per 14 CFR 91.227:
    - GPS Position, Altitude, and Position Integrity
    - Ground Track and/or Heading, Ground Speed, and Velocity Integrity
    - Air Ground Status
    - Flight ID, Call Sign, ICAO Registration Number
    - Capability and Status Information
    - Transponder Squawk Codes between 0000-7777.
    - Emergency Status
    - IDENT - initiates SPI (special position identification) pulse for 18 seconds
  - Pressure Altitude Broadcast Inhibit

The GTX 335 performs the following additional functions:

- Reception of TIS-A traffic data from a ground station
- Provide TIS-A traffic alerting to the pilot via interfaced display and audio output.

The GTX 345 performs the following additional functions:

- Reception of ADS-B In data on 1090 MHz
  - ADS-B (Data directly from another transmitting aircraft)
  - ADS-R (Rebroadcast of ADS-B data from a ground station)
- Reception of ADS-B In data on UAT (978 MHz)
  - ADS-B (Data directly from another transmitting aircraft)
  - ADS-R (Rebroadcast of ADS-B data from a ground station)
  - TIS-B (Broadcast of secondary surveillance radar) (SSR) derived traffic information from a ground station.
  - FIS-B (Broadcast of aviation data from a ground station)
- Provide ADS-B traffic information and alerting to the pilot via an interfaced display

- Correlation and consolidation of traffic data from multiple traffic sources
- Aural and visual traffic alerting

- Provide FIS-B data to the pilot via an interfaced display
  - Graphical and textual weather products
    - NEXRAD
    - PIREPs
    - AIRMET/SIGMETs
    - METARs
    - TAFs
    - Winds Aloft
  - Aviation Data
    - TFRs
    - NOTAMs

1.3 Capabilities

The Garmin GTX 33X and GTX 3X5 as installed in this aircraft have been shown to meet the equipment requirements of 14 CFR § 91.227 when operating in accordance with sections 2.1 and 2.2 of this supplement.

1.4 Installation Configuration

This aircraft is equipped with a GTX 33X and/or GTX 3X5 with the following interfaces/ features:

Equipment Installed:

Transponder #1

- ☐ GTX 330
- ☐ GTX 330D
- ☐ GTX 33
- ☐ GTX 33D
- ☐ GTX 335
- ☐ GTX 335R
- ☐ GTX 345
- ☑ GTX 345R

Transponder #2 (if installed)

- ☐ GTX 330
- ☐ GTX 330D
- ☐ GTX 33
- ☐ GTX 33D
- ☐ GTX 335
- ☐ GTX 335R
- ☐ GTX 345
- ☐ GTX 345R

Interfaced GPS/SBAS Position Source(s):

GPS #1

- ☑ Internal
- ☐ GTN 6XX/7XX Series
- ☐ GNS 400W/500W Series
- ☐ GNS 480
- ☐ GIA 63W
- ☐ GDL 88 (GTX 330 only)

GPS #2 (if installed)

- ☐ Internal
- ☐ GTN 6XX/7XX Series
- ☐ GNS 400W/500W Series
- ☐ GNS 480
- ☐ GIA 63W
- ☐ GDL 88 (GTX 330 only)

Interfaced Pressure Altitude Source:

Pressure Altitude Source #1

- ☑ GDC74 ADC
- ☐ Garmin Altitude Encoder

Pressure Altitude Source #2 (if installed)

- ☐ _____
- ☐ Garmin Altitude Encoder

Interfaced Remote Control Display (Required for remotely mounted GTX variants):

Transponder #1 Remote Control Display	Transponder #2 Remote Control Display (if installed)
☐ GTN 6XX/7XX	☐ GTN 6XX/7XX
☐ GNS 480	☐ GNS 480
☑ G950/1000 Display	☐ G950/1000 Display
☐ Gables 7534 Controller	☐ Gables 7534 Controller

Interfaced Active Traffic System:

☑ None

☐ TCAD

☐ TAS/TCAS

NOTE

If the system includes all of the following components:

- GTX 345R,
- G950/1000 Display, and
- TCAD or TAS/TCAS

Then the aircraft is no longer equipped with a TSO compliant active TCAD, TAS or TCAS system. Any operational requirement to be equipped with such system is no longer met.

1.5 Definitions

The following terminology is used within this document:

ADS-B: Automatic Dependent Surveillance-Broadcast

AFM: Airplane Flight Manual

AFMS: Airplane Flight Manual Supplement

ATCRBS: Air Traffic Control Radar Beacon System

CFR: Code of Federal Regulations

ES: Extended Squitter

GNSS: Global Navigation Satellite System

GNS: Garmin Navigation System

GPS: Global Positioning System

GTX: Garmin Transponder

GTN: Garmin Touchscreen Navigator

ICAO: International Civil Aviation Organization

LRU: Line Replaceable Unit

PABI: Pressure Altitude Broadcast Inhibit

POH: Pilot Operating Handbook

SBAS: Satellite-Based Augmentation System

SW: Software

TCAS: Traffic Collision Avoidance System

TIS: Traffic Information Service

TX: Transmit

Section 2. LIMITATIONS

2.1 Minimum Equipment

The GTX 33X and GTX 3X5 must have the following system interfaces fully functional in order to be compliant with the requirements for 14 CFR 91.227 ADS-B Out operations:

Interfaced Equipment	Number Installed	Number Required
Uncorrected Pressure Altitude Source	1	1
GPS SBAS Position Source	1 or more	1
Remote Control Display (for remotely mounted transponders)	1 or more	1

Table 2 – Required Equipment

2.2 ADS-B Out

The GTX 33X and GTX 3X5 only comply with 14 CFR 91.227 for ADS-B Out when all required functions are operational. When the system is not operational, ADS-B Out transmit failure messages will be present on the remote control display interface, or the GTX 330 or GTX 3X5 panel display. If a Gables 7534 controller is being used the ADS-B equipment failure condition will be annunciated on the Gables display "Transponder Fail" while the ADS-B Out Position failure will be annunciated by the remotely installed "ADS-B POSN FAIL" Annunciator.

2.3 TIS Traffic Display with User Navigation Angle

Display of TIS traffic from a GTX 33/330 or GTX 335 is not permitted with an interfacing display configured for a navigation angle of "user".

2.4 Applicable System Software

This AFMS/AFM is applicable to the software versions shown in Table 3.

The Main GTX software version is displayed on the splash screen during start up for the GTX 330 and GTX 3X5 panel mounted units, and the External LRU or System page on the interfaced remote control display for remotely mounted GTX transponders.

Software Item	Software Version *(or later FAA Approved versions for this STC)*
GTX 33X Main SW Version	8.04
GTX 3X5 Main SW Version	2.12

Table 3 - Software Versions

2.5 Pressure Altitude Broadcast Inhibit (PABI)

Pressure Altitude Broadcast Inhibit shall only be enabled when requested by Air Traffic Control while operating within airspace requiring an ADS-B Out compliant transmitter. PABI is enabled by selecting the GTX to ON mode.

2.6 Datalinked Weather Display (GTX 345 Only)

Do not use datalink weather information for maneuvering in, near, or around areas of hazardous weather. Information provided by datalink weather products may not accurately depict current weather conditions.

Do not use the indicated datalink weather product age to determine the age of the weather information shown by the datalink weather product. Due to time delays inherent in gathering and processing weather data for datalink transmission, the weather information shown by the datalink weather product may be significantly older than the indicated weather product age.

Do not rely solely upon datalink services to provide Temporary Flight Restriction (TFR) or Notice to Airmen (NOTAM) information.

2.7 Portable Electronic Devices

This STC does not relieve the operator from complying with the requirements of 91.21 or any other operational regulation regarding portable electronic devices.

Section 3. EMERGENCY PROCEDURES

3.1 Emergency Procedures

No Change.

3.2 Abnormal Procedures

3.2.1 LOSS OF AIRCRAFT ELECTRICAL POWER GENERATION

XPDR Circuit Breaker ..... **PULL**

Transponder and ADS-B Out functions will no longer be available.

NOTE

This guidance is supplementary to any guidance provided in the POH or AFM for the installed aircraft for loss of power generation.

3.2.2 LOSS OF GPS/SBAS POSITION DATA

When the GPS/SBAS receiver is inoperative or GPS position information is not available or invalid, the GTX will no longer be transmitting ADS-B Out data.

For GTX 330 installations:

NO ADSB annunciator illuminated:

Interfaced GPS position sources ..... **VERIFY VALID POSITION**

For GTX 3X5 installations:

NO 1090ES TX annunciator illuminated:

Interfaced GPS position sources ..... **VERIFY VALID POSITION**

For GTX 33 and GTX 3X5R installations:

Reference Display Device documentation for applicable annunciation:

Interfaced GPS position sources ..... **VERIFY VALID POSITION**

Section 4. NORMAL PROCEDURES

The procedures described below are specific only to the panel mounted GTX 330 or GTX 3X5 transponders. Cockpit Reference Guides and Pilot Guides for interfaced remote control displays will provide additional operating information specific to the displays or other traffic systems.

ADS-B Out functionality resides within the GTX transponders thereby providing a single point of entry for Mode 3/A code, Flight ID, IDENT functionality and activating or deactivating emergency status for both transponder and ADS-B Out functions. Details on performing these procedures are located in the GTX 330/330D Pilot's Guide and GTX 3X5 Series Transponder Pilot's Guide.

4.1 Unit Power On

For GTX 330 installations:

GTX Mode ..... **VERIFY ALT**
NO ADSB ..... **CONSIDERED**

For GTX 3X5 installations:

GTX Mode ..... **VERIFY ALT**
NO 1090ES TX ..... **CONSIDERED**

NOTE

The NO ADS-B or NO 1090ES TX Annunciation (or associated display annunciations) may illuminate as the unit powers on and begins to receive input from external systems, to include the SBAS position source.

4.2 Before Takeoff

For GTX 330 installations:

ADS-B TX ..... **VERIFY ON**
NO ADSB ..... **EXTINGUISHED**

For GTX 3X5 installations:

1090ES TX CTL ..... **VERIFY ON**
NO 1090ES TX ..... **EXTINGUISHED**

NOTE

The ADS-B TX or 1090ES TX CTL must be turned on and the NO ADS-B or NO 1090ES TX Annunciation (or associated display annunciations) must be **EXTINGUISHED** for the system to meet the requirements specified in 14 CFR 91.227. This system must be operational in certain airspaces after January 1, 2020 as specified by 14 CFR 91.225.

Section 5. PERFORMANCE

No change.

Section 6. WEIGHT AND BALANCE

See current weight and balance data.

Section 7. SYSTEM DESCRIPTION

The Garmin GTX 330 and GTX 3X5 Pilot's Guides, part numbers, and revisions listed below contain additional information regarding GTX system description, control, and function.

Title	Part Number	Revision
GTX 330 Pilot's Guide GTX 3X5 Pilot's Guide	190-00207-00 190-01499-00	Rev. G (or later) Rev. A (or later)

Pilot's Guides for interfaced displays, part numbers and revisions listed below, provide additional operating information for the Garmin GTX 33 and GTX 3X5R.

Title	Part Number	Revision
Garmin GTN 725/750 Pilot's Guide	190-01007-03	Rev. E (or later)
Garmin GTN 625/635/650 Pilot's Guide	190-01004-03	Rev. E (or later)
GNS 480 Pilot's Guide	190-00502-00	Rev. D (or later)
GTX 3X5 Series Transponder G1000 Pilot's Guide	190-01499-01	Rev. A (or later)

7.1 GTX TIS Behavior

The TIS Standby/Operate controls for GTX 33/330 and GTX 335 units only function when the aircraft is airborne.

7.2 GTX 345R and G950/1000 No Bearing Traffic Alerts

No visual indication is provided for no bearing traffic alerts. Only an aural indication of the no bearing traffic alert is provided. If an aural alert for no bearing traffic has been previously issued, a "no bearing traffic clear" aural indication will be provided once all traffic alerts are resolved.

All aural alerts are inhibited below 500' AGL, therefore a "no bearing traffic clear" aural may not be heard in a landing or touch and go flight scenario.